Gaming Reader

Magnetic Partial Insert Reader

Triple Track Decoding in a Single, Small Footprint

ID TECH's Gaming Reader is a manually-operated, partial insert reader. The Gaming Reader supports single, dual or triple track magnetic heads for reading magnetic media with short fields of encoded data that complies with ISO 7810 and 7811 standards.

Reads Magnetic Stripes

ID TECH's TriMag technology provides excellent read performance of magnetic stripe cards. At speeds of three to eighty inches per second, the Gaming Reader ensures excellent first-time read reliability.

Built to Last

The Gaming Reader is designed to be used in environments that create high levels of Electro-Static Discharge (ESD). Its proprietary design removes ESD from the card surface when the card is inserted. The stainless steel roller design is implemented to avoid card scratching issues that are commonly found in various applications. The bezel, chassis, and read-head are vandal resistant. There is also a large debris slot to allow foreign material to fall through for jam-proof operation.

Features and Benefits:

- Available in Mag only or Smart Card only
- Bezel options compatible with industry standard mounting options
- Roller head mount reduces card scratching
- Capability of lengthening the insertion depth - two options
- ESD immunity option for applications prone to ESD discharge
- Reads up to three tracks of magnetic stripe data
- Excellent noise immunity and reading of real-world cards
- Landing style contacts with embedded MiniSmart
- Lighted bezel option
- Proven and tested to last a minimum of one million cycles
- Card present switch
- Available in RS-232, TTL, and USB interfaces

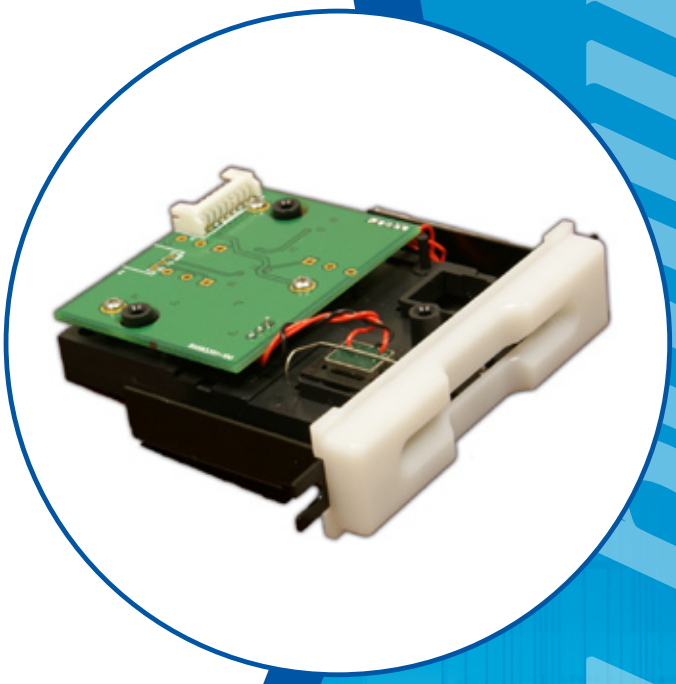

IDTECH®
Value through Innovation

Gaming Reader Specifications IDSB-3XXX-XX-XXXXX-XX

Electrical

Power Requirements:	RS-232 35m Max. USB +5 DC TTL, 100 μA Max. - standby mode, 3mA Max. - operating mode
Interfaces:	TTL, USB, RS-232

Environmental

Operating Temperature:	0°C to 60°C (32°F to 140°F)
Storage Temperature:	-30°C to 60°C (-22°F to 140°F) non-condensing
Vibration & Shock:	Sweep 10Hz to 50 Hz/min; 294 m/s^2 (30G)

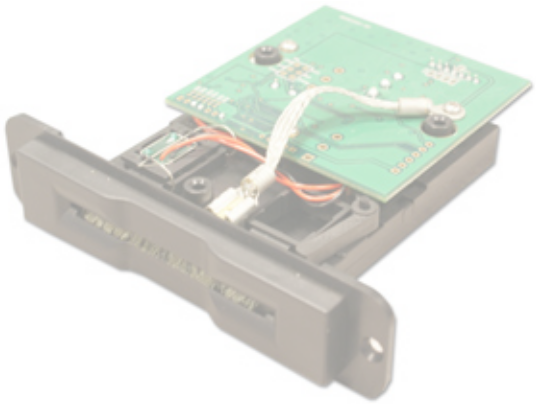

Reliability

Operating Life:	1,000,000 cycles minimum
Warranty:	One year, parts and labor

Mechanical

Media Thickness:	0.010 inches (0.254mm) to 0.038 inches (.965mm)
Media Formats:	ISO 7811, other F2F formats
Slot Width:	0.037 inches (.94mm)
Swipe Speed:	3 to 60 inches per second, bi-directional
Dimensions(L)x(W)x(H):	3.49 inches (88.66mm) x 2.36 inches (60mm) x 1 inches (25.4mm)

Foot Print:

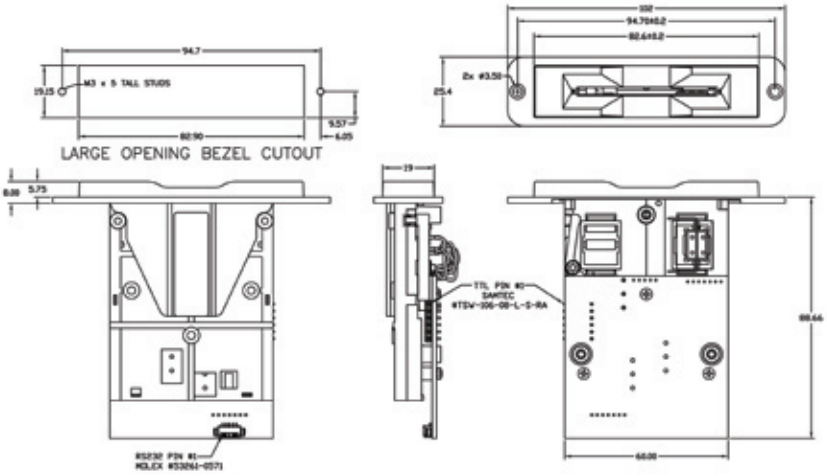

IDTECH®
Value through Innovation

Corporate Headquarters:
10721 Walker Street, Cypress, California 90630
www.idtechproducts.com
(714) 761-6368 sales@idtechproducts.com

International Sales Office
Canada & South America:
+450 465 5261 (Canada) robertop@idtechproducts.com

European Sales Offices:
+49(0) 8851 6159900 (Germany)
emea@idtechproducts.com

ISO 9001 Certified

©2009 International Technologies & Systems Corporation. ID TECH is a registered trademark of International Technologies & Systems Corporation.
Value through Innovation is a trademark of International Technologies & Systems Corporation. All specifications subject to change without notice.

80083502-001 R10/09